KEY NOTES-RCP

KEY NOTES-ADA BATH

1. Painted drywall ceiling.
2. Ceiling mounted fluorescent fixtures.
3. Recessed down light fixtures.

SYMBOLS

- 2 x 4 FLUORESCENT FIXTURE
- NEW PARTITION
- EMERGENCY LIGHTS
- EXIT SIGN (*SHADED AREA TO INDICATE DIRECTION*)
- RECESSED DOWNLIGHT
- SURFACE MOUNTED FLUORESCENT FIXTURE
- REAR FLOOD LIGHTING
- DECORATIVE EXTERIOR LIGHTS

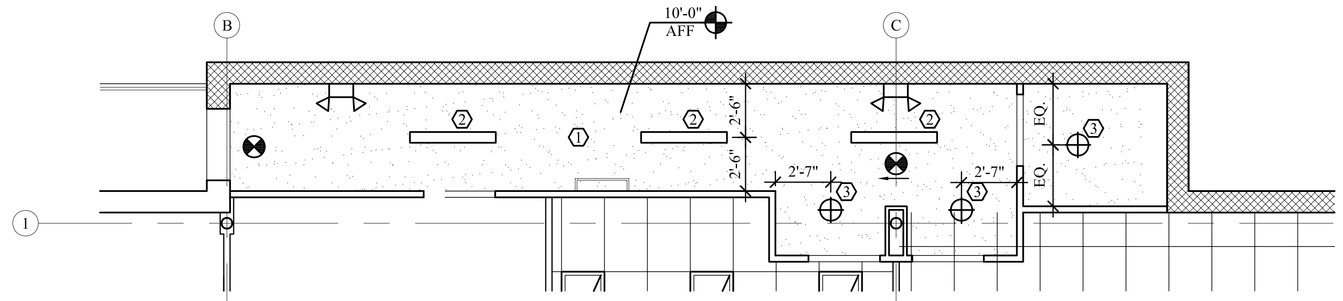

B PARTIAL REFLECTED CEILING PLAN
Scale: ¼" = 1'-0"

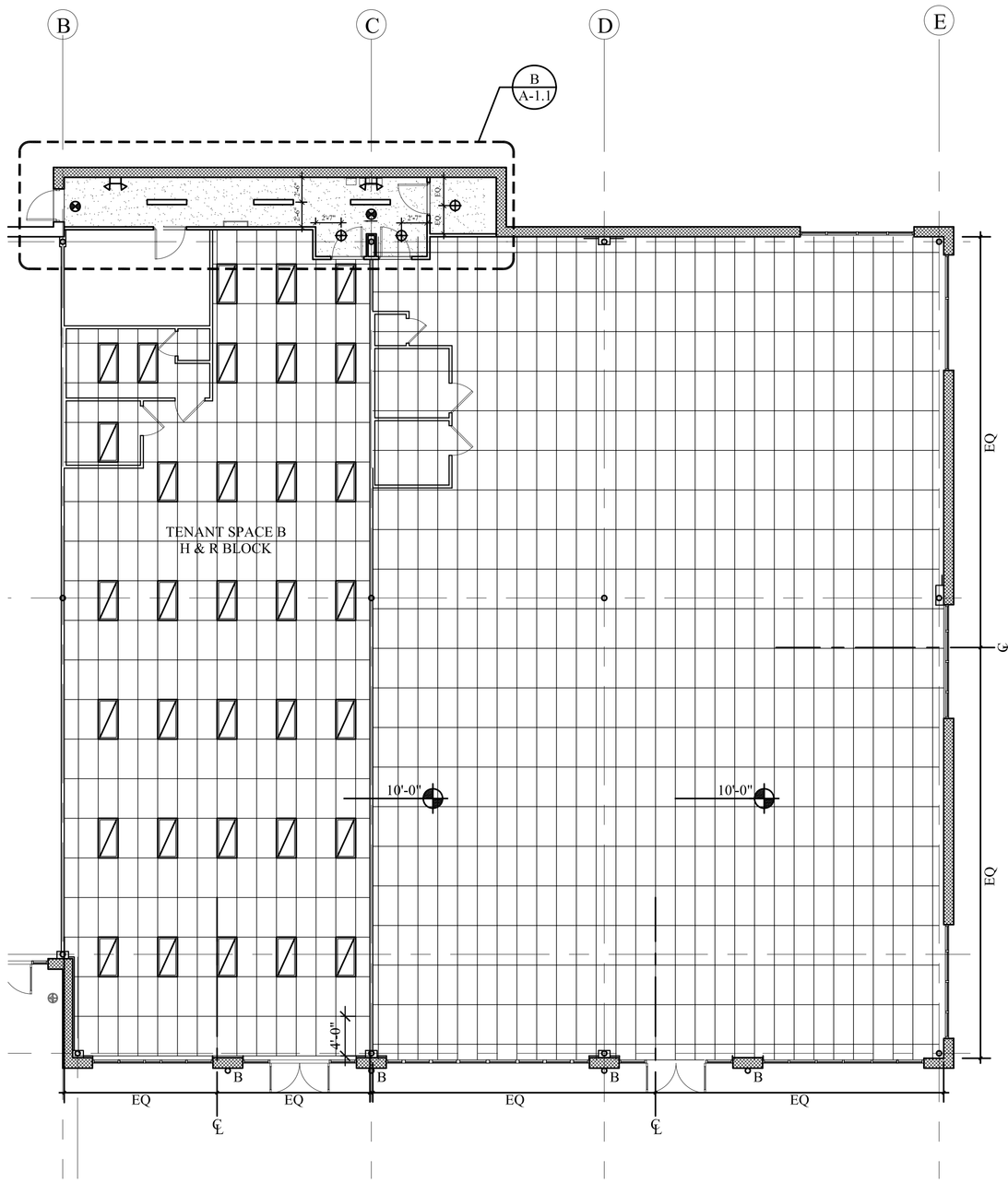

A PARTIAL REFLECTED CEILING PLAN
Scale: ⅛" = 1'-0"

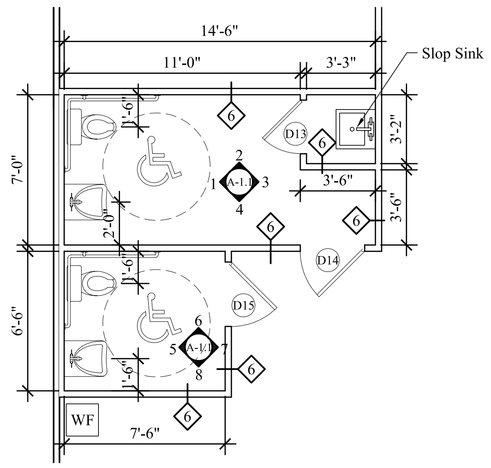

C FLOOR PLAN
Scale: ¼" = 1'-0"

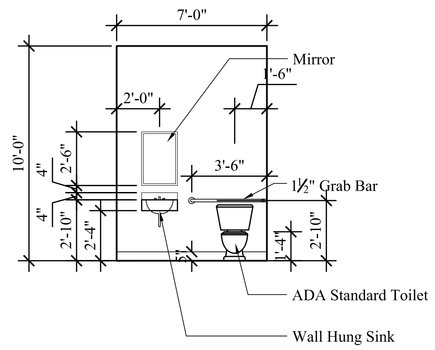

1 ELEVATION
Scale: ¼" = 1'-0"

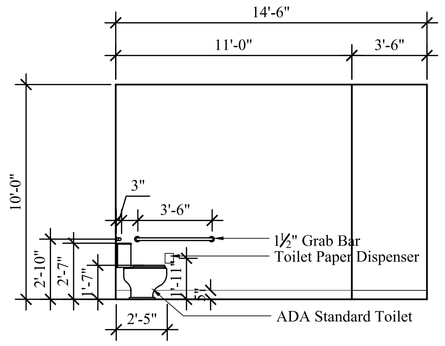

2 ELEVATION
Scale: ¼" = 1'-0"

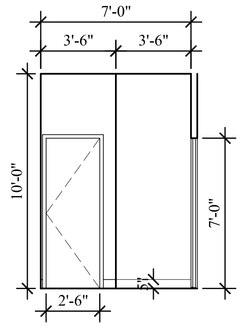

3 ELEVATION
Scale: ¼" = 1'-0"

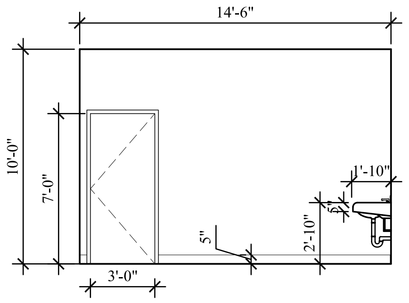

4 ELEVATION
Scale: ¼" = 1'-0"

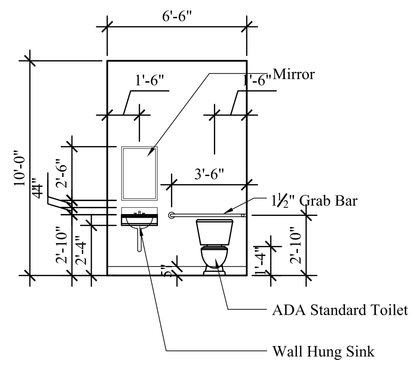

5 ELEVATION
Scale: ¼" = 1'-0"

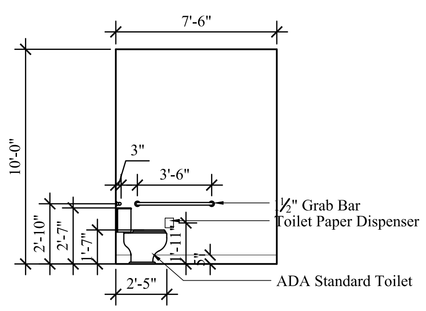

6 ELEVATION
Scale: ¼" = 1'-0"

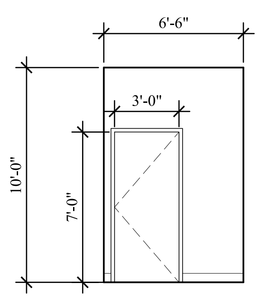

7 ELEVATION
Scale: ¼" = 1'-0"

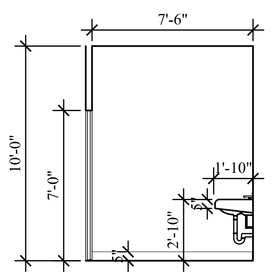

8 ELEVATION
Scale: ¼" = 1'-0"

NOTE: All wood used for structural elements, roof framing, bulk head framing and similar purposes shall be fire retardant treated inaccordance with AWPA-C27-74 for plywood, AWPA-C20-74 for lumber. (2003 International Building Code)

Soe Lin & Associates

SL&A

Architecture, Interiors, Planning
4340 East West Highway
Suite 105
Bethesda, Maryland
20814 USA
301.986-9300
Fax.986-0500

Notes Consultants

META ENGINEERS, INC.
1515 Wilson Blvd.
Arlington, VA 22209
(703) 224-1188
metaengineers.com

COLUMBIA ENGINEERING INC.
6470 Dobbin Road
Columbia, MD 21045
(410) 992-9970
columbiaengineering.com

Project

THE SHOPPES at DOBBIN CORNER

6478 DOBBIN CENTER WAY
COLUMBIA, MD

NEW RETAIL BUILDING

DOBBIN CENTER LTD.

Drawing Title
REFLECTED CEILING PLAN / ADA TOILET DETAILS

Date	Issue
07-01-2004	REVIEW
08-17-2004	REVIEW
11-19-2004	MEP ISSUE-Prelim
12-1-2004	Contractor Bid
12-30-2004	PERMIT ISSUE
03-22-2005	1 COUNTY COMMENTS
04-18-2005	2 CLIENT COORD.
05-10-2005	3 COUNTY COMMENTS

Dwn By ALB
Chkd By MG
Job No.

Sheet No.
A-1.1